I-SWEEEP Display and Safety Regulations

The I-SWEEEP Display and Safety Committee have the authority on display and safety issues for projects to compete in I-SWEEEP. The I-SWEEEP Display and Safety Committee may require students to make revisions on their display to ensure safety regulations.

Maximum Size of Project Display at I-SWEEEP

30 inches (76 centimeters) deep

48 inches (122 centimeters) wide

108 inches (274 centimeters) high from floor to top of project

These are maximum measurements, so your display may be smaller than this. Maximum project sizes include all project materials and equipment's to present the project such as display board, models, kits, and devices.

For each project, I-SWEEEP will provide a booth that includes a skirted table, 2 chairs, and a waste basket.

Project Booth

Students will use the table to stand their board. Students can bring their own pre-decorated display board to the fair or they can ship the board to the I-SWEEEP Department in advance. If it is not possible, I-SWEEEP will provide a three-fold display board. You should come to the fair with pre-printed materials to prepare your board.

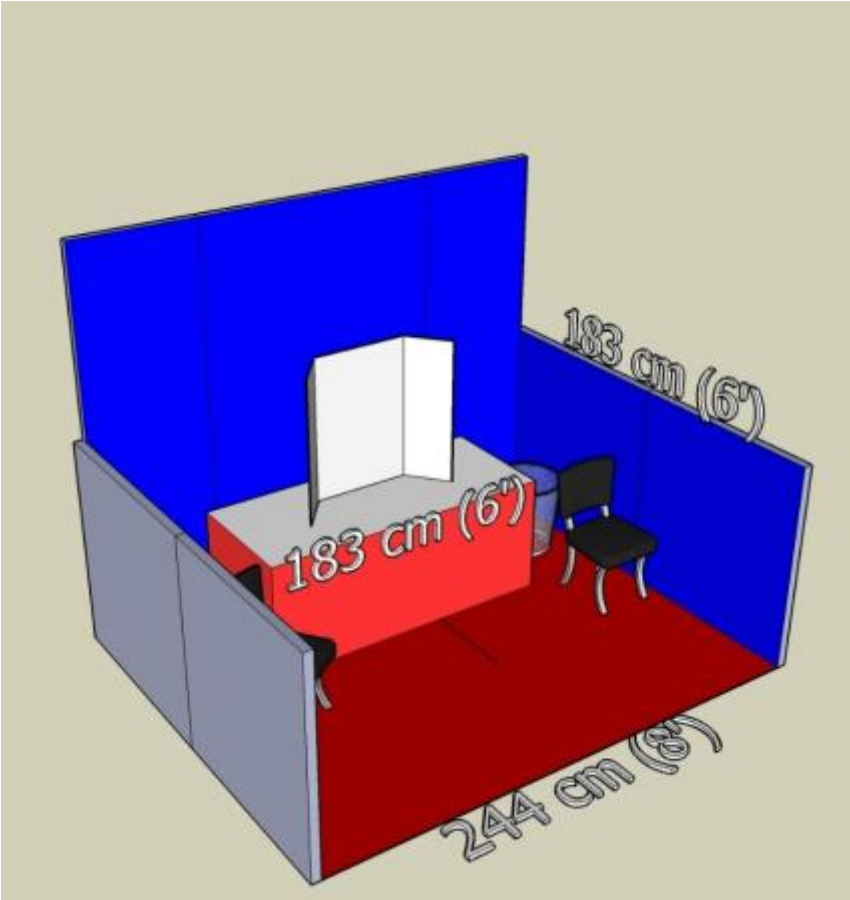

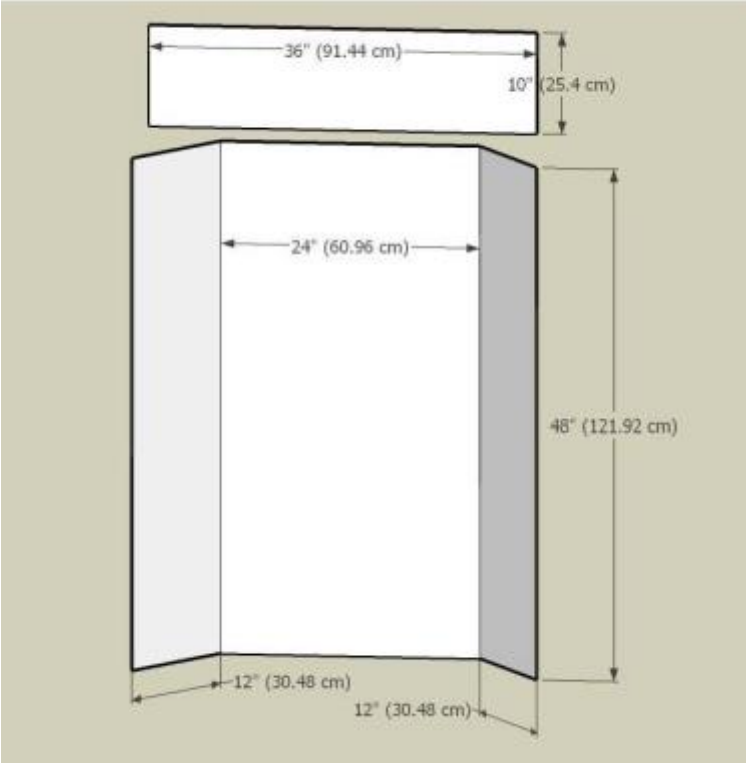

Display Board

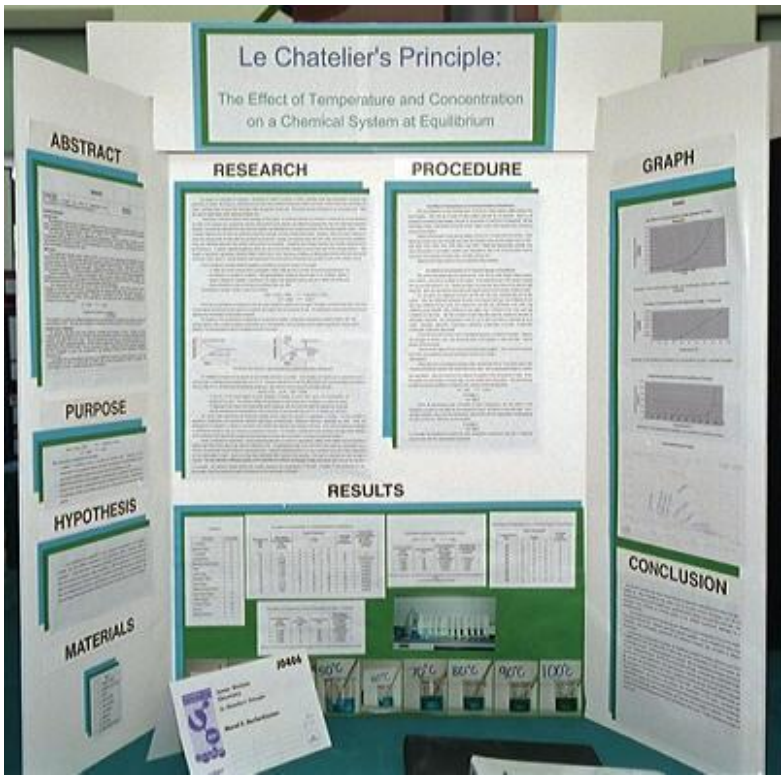

Sample Display Board

[Display Board Shipping Instructions]

Items not allowed in the Exhibit Area

The exhibits **must not** include any of the following:

1. Microbial cultures or fungi, live or dead. Try photographs instead.
2. Displays of live animals.
3. Preserved vertebrate animals, whether whole or their parts (this includes humans). Teeth, hair, nails, and histological sections are permissible if properly acquired and form is filed.
4. Photographs showing vertebrate animals in any non-normal condition.
5. Open or concealed flames, matches, or lighters.
6. Hazardous chemicals and any household chemicals including water.
7. Highly combustible solids, fluids, or gases.

8. Sharp items (for example, syringes, needles, pipettes, knives)
9. Controlled substances.
10. Dry ice or other sublimating solids.
11. Radioactive materials.
12. Operating lasers.
13. Human or animal food
14. Project sounds, lights, odors or any other display items must not be distracting.
15. Batteries with open-top cells
16. High voltage equipment must be shielded with a grounded metal box or cage to prevent accidental contact. Wiring, switches, and metal parts must be located out of reach.
17. Electric circuits for 110 volts AC must have an underwriters laboratories approved card equipped with a grounded (3 pronged) plug. Exhibits are limited to 300 watts.
18. All wiring must be properly insulated.
19. Bare wire and exposed knife switches are permissible only in low voltage, low current circuit of 12 volts or less.
20. Electrical connections in 110 volt circuits must be soldered or fixed with approved connectors.
21. Devices emitting ultraviolet light must be equipped with the proper filters for eye protection

Other Exhibit Area Information

1. A project data book and a research paper are not required but are recommended. **Students should make their own copies to display such items.**
2. All judges will have your abstract before the judging time so you do not have to distribute the copies of your abstract to judges.
3. No food or drinks, except small containers of bottled water for personal consumption, are allowed in the exhibit hall.
4. No cell phones and pagers are allowed in the exhibit hall. Before you enter the exhibit hall, hand over your cell phone to I-SWEEEP officials in the front desk. Cell phones and pagers found in the exhibit hall are confiscated by the Display and Safety Committee.
5. CD, MP3 Players, Games are allowed in the exhibit area as long as you do not distract others.

Note that under no circumstances are students allowed to remove their projects until after the close of the Awards Ceremony.